WASHBASIN FINION

PRODUCT INFORMATION

1 . POSITION

Model	**41681L**
Collection	Finion
PROJECTS	PREMIUM
Width	1000 mm
Depth	470 mm
Weight	28 kg
description	ground underside TitanCeram wall fastening incl. unclosable valve with ceramic valve cover EN 31, EN 14688
Tap fitting / Tap hole remark	suitable for 2 1-hole tap fittings, tap holes punched out
Overflow remark	without overflow
material	TitanCeram
Specification texts	Finion; Washbasin; TitanCeram; Size: 1000 x 470 mm; Rectangle; ground underside; suitable for 2 1-hole tap fittings, tap holes punched out; without overflow; wall fastening; incl. unclosable valve with ceramic valve cover; EN 31, EN 14688

COLOURS

White Alpin CeramicPlus	41681LR1	4051202557041
Star White CeramicPlus	41681LR2	4051202557034
Stone White CeramicPlus	41681LRW	4051202854539

Villeroy & Boch
1748
PROJECTS

TECHNICAL DRAWINGS
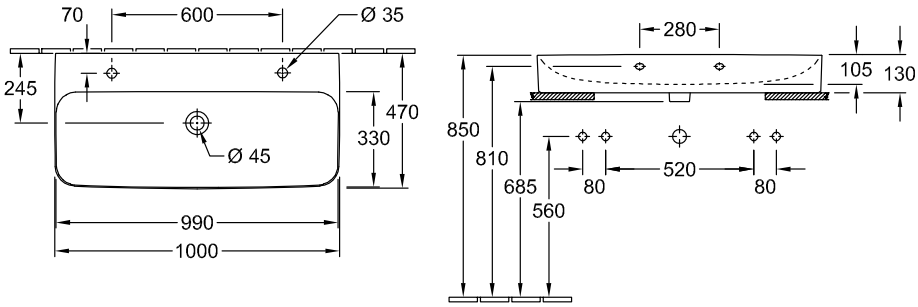
41681L